Horizontal Hybrid System Installation

Step 1: - String line and spray paint holes **72.75" on center** Spacing, Dig Holes

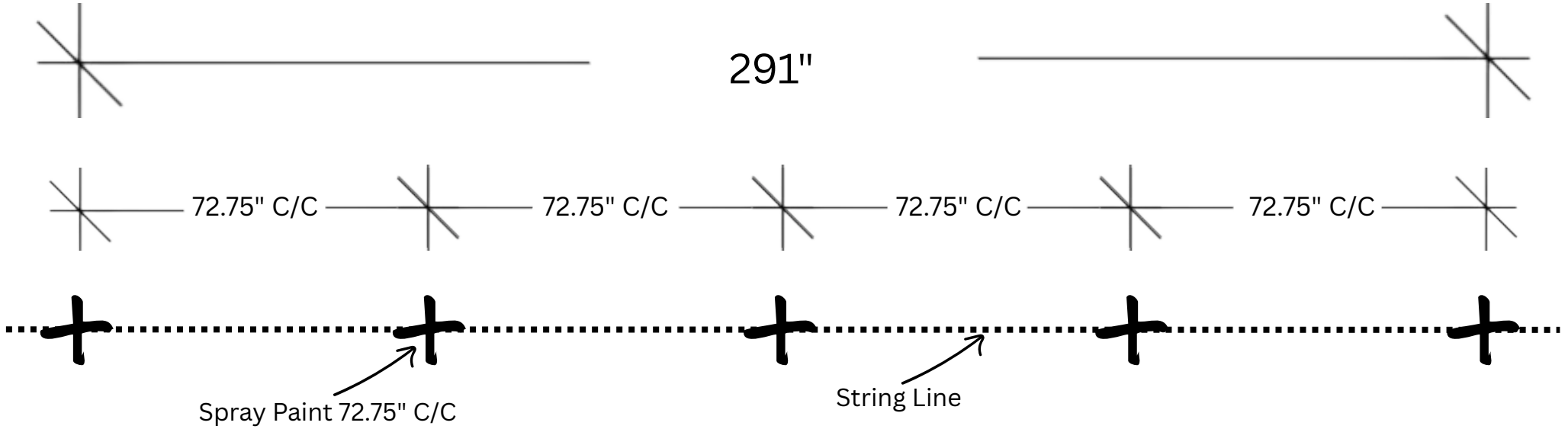

Step 2: - Set first and last post of line, attach string line to side of first and last post, tighten string -start setting first full length panel using a 2x4 cut at 69.75" as measuring stick setting posts 69.75" from inside to inside of posts, plumb posts to string line without moving string line (1/8" Gap)

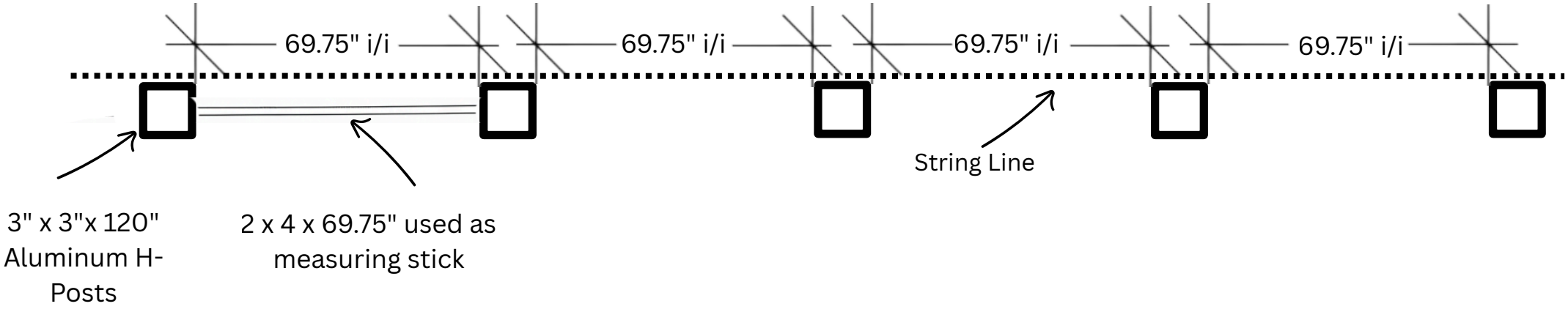

© 2023 Titan Fencing. All Rights Reserved

6' Wide x 7' Tall Horizontal Hybrid System

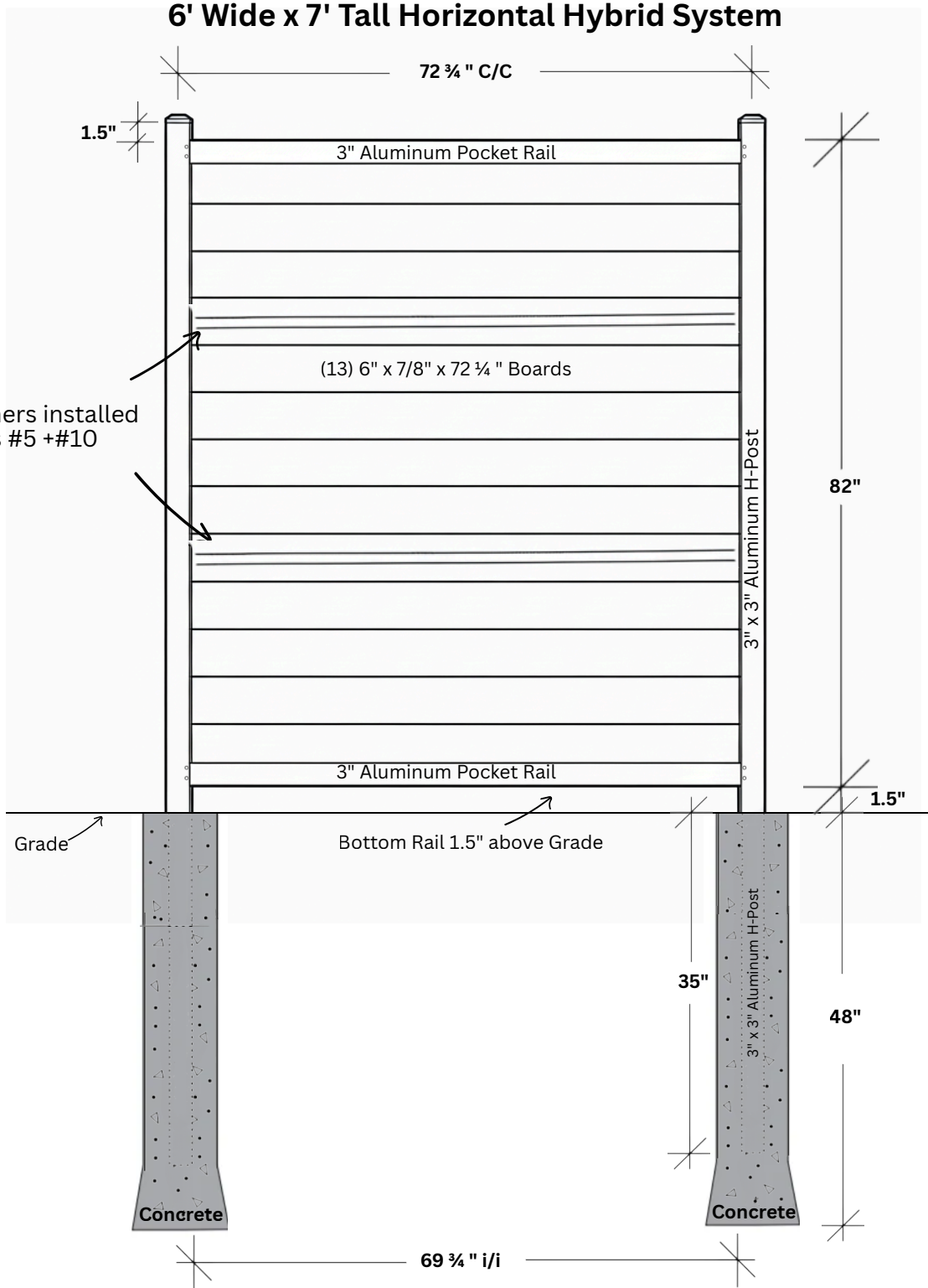

Step 3: Once concrete is set, install bottom rails into H- Posts 1.5" above grade. (choose level + stepped or sloped rails). Drill two ⅜" hole with metal bit through first layer of H-Post, spaced roughly 1 inch apart vertically inline with rail. Install two 1.5" screw into ⅜" hole and through rail, securing rail. Install ⅜" hole plugs.

Step 4: Install 13 tongue and groove boards horizontally stacked onto bottom rail. install board stiffeners in boards #5 and #10

© 2023 Titan Fencing. All Rights Reserved

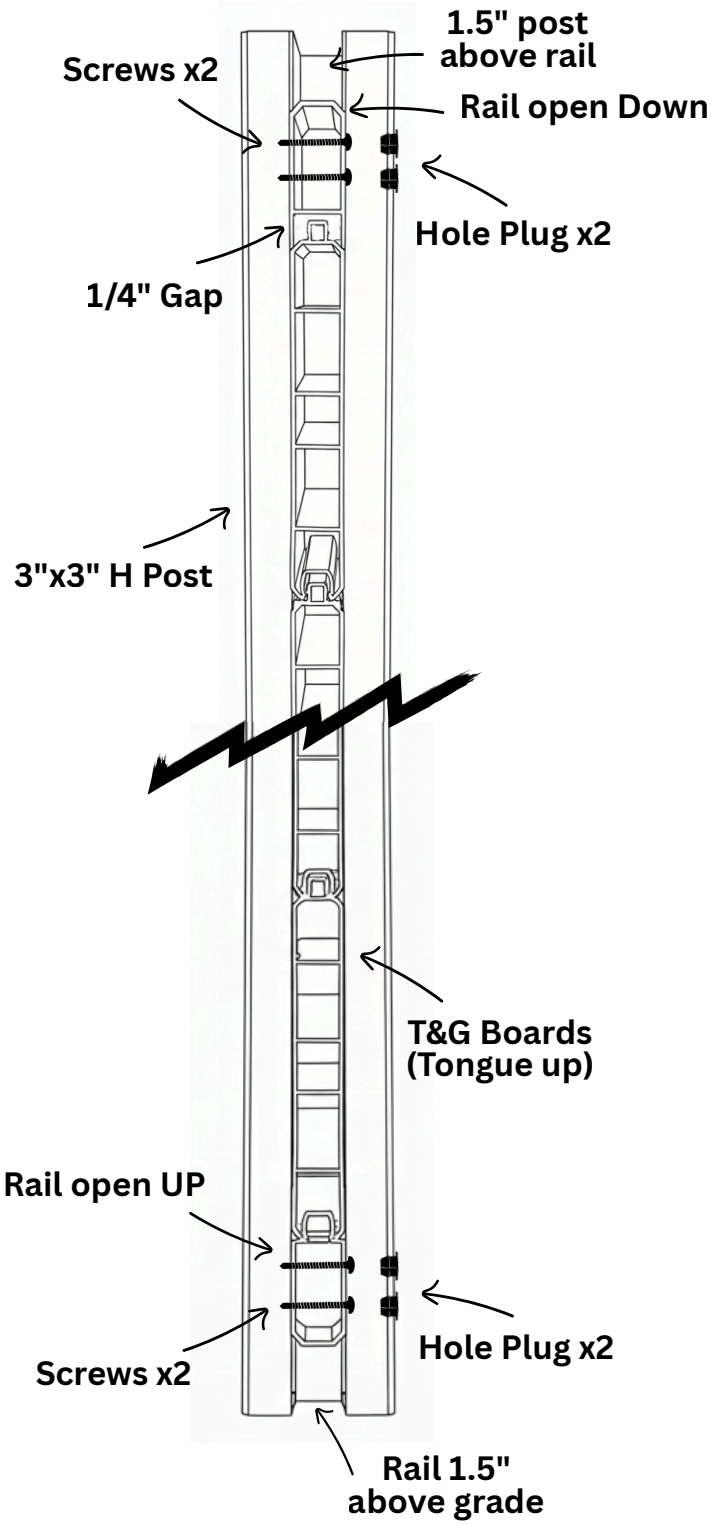

Step 5: install top rails into H-Posts leaving ¼” between top of boards and bottom of rail for expansion. Drill two ⅜" hole with metal bit through first layer of H-Post, spaced roughly 1 inch apart vertically inline with rail. Install two 1.5" screw into ⅜" hole and through rail, securing rail. Install ⅜" hole plugs..

Step 6: Cut H-Posts to desired height, typically 1.5" from top of highest rail. Install post cap

© 2023 Titan Fencing. All Rights Reserved

“T” Connection to H-Post

Step 1: Attach outer U-channel into “groove” of H-Post , screw two of 3/4" screws through U-channel 1" from top and 1" from bottom of U-channel

Step 2: Attach bottom rail to outer U-channel with two 3/4" screws spaced roughly 1" vertically apart

Step 3: Slide inner U-channel inside outer U-channel, resting on top of bottom rail, secure inner + outer U-channel to H-post with two 3/4" screws, 2' from bottom of outer U-channel and 2' from top of outer U-channel

Step 4: Fill panel with boards, attach top rail to outer U-channel with two 3/4" screws spaced roughly 1" vertically apart

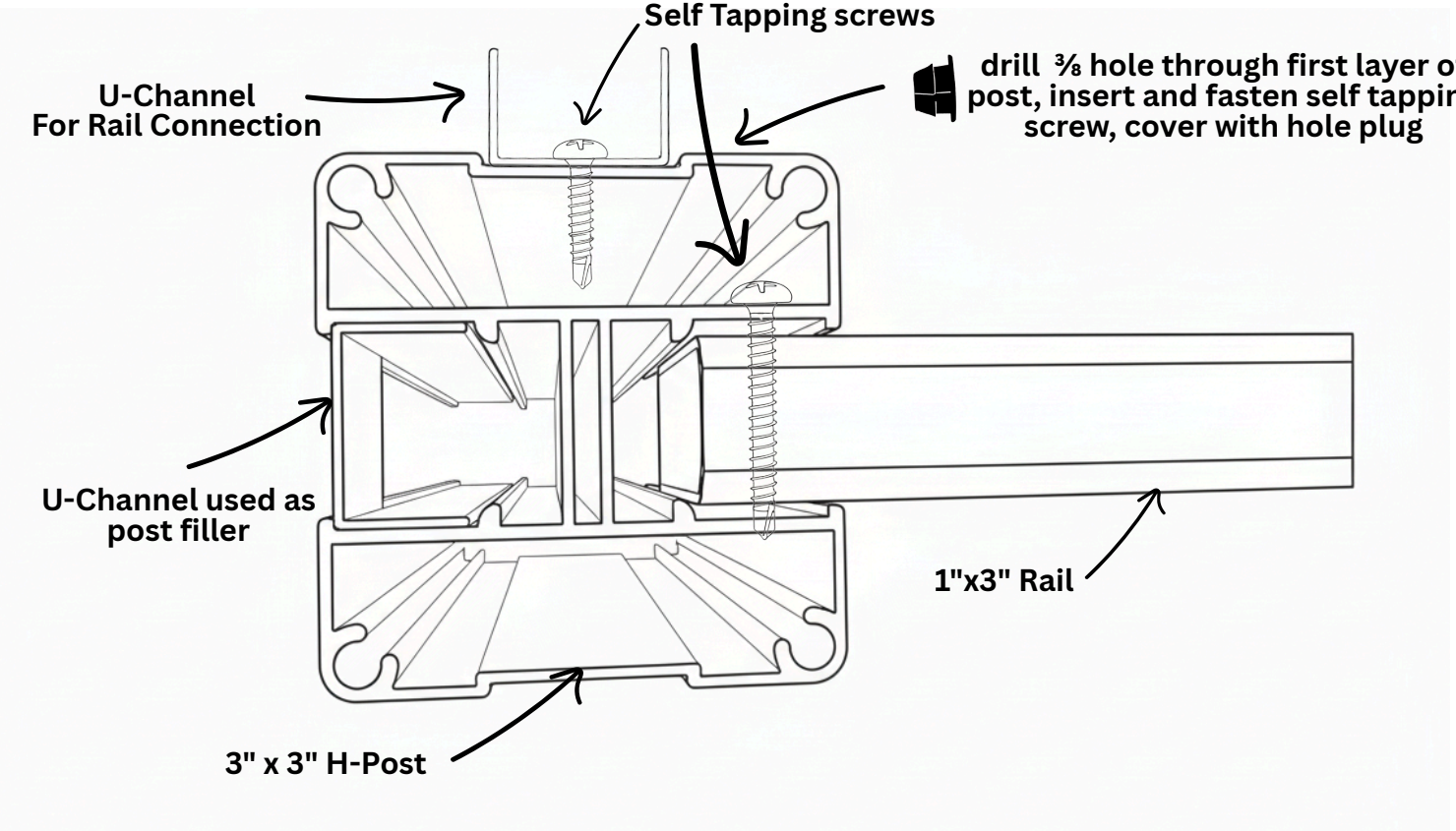

© 2023 Titan Fencing. All Rights Reserved

Hybrid System Gate

Note: Titan Vertical and Horizontal Gates are the same except for board orientation

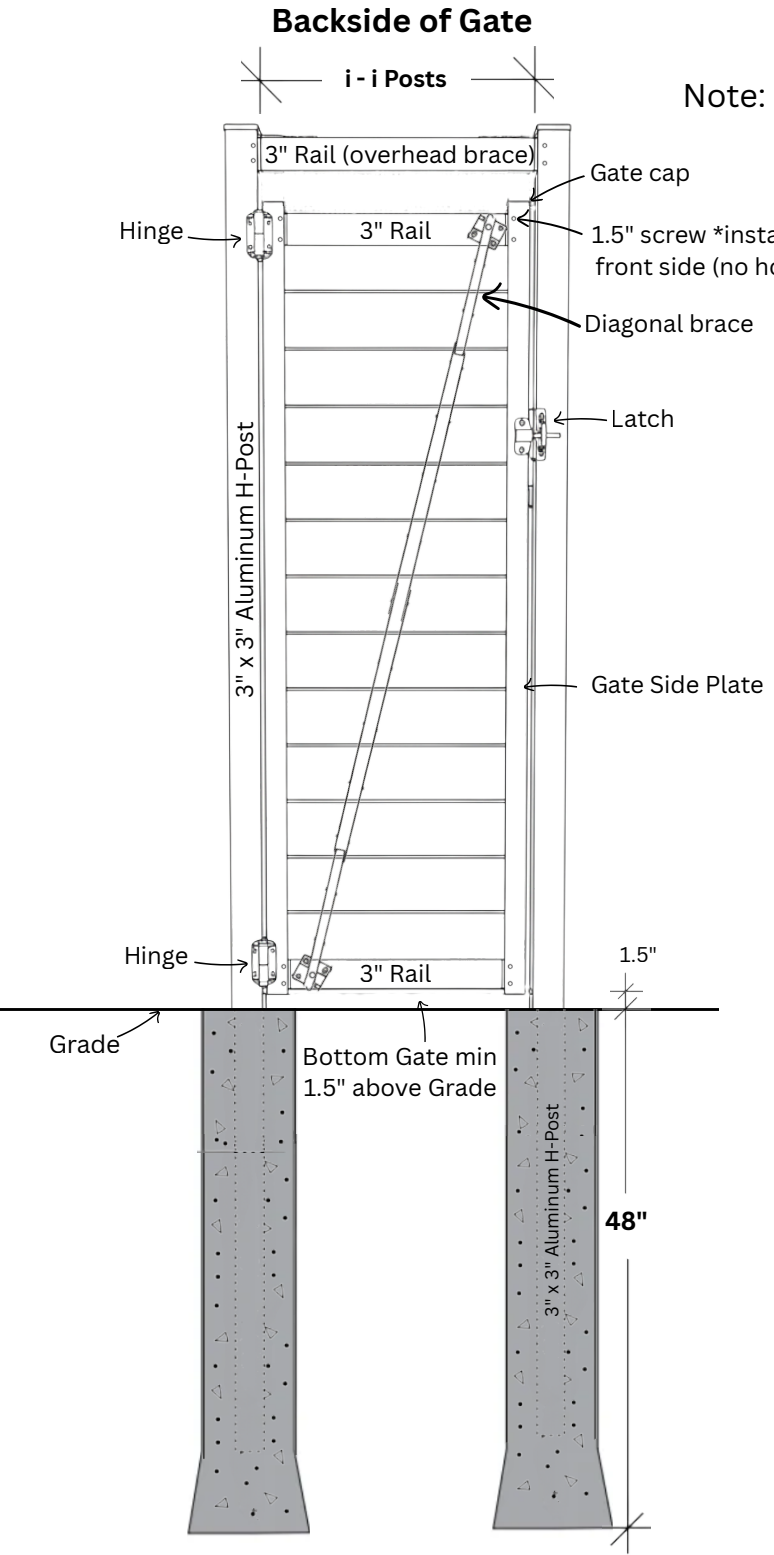

Step 1: Cut top and bottom gate rails **3" smaller than the inside to inside** measurement of the gate H-posts

Step 2: Install gate side frames to gate rails with one 1.5" screw in each outer corner, fill gate panel with boards as needed. *** screws installed on front side of gate***

Step 3: Square gate panel by measuring diagonally from corner to corner, when both diagonal measurements are the same, the gate is square. Lock the panel square by installing another 1.5" screw in each corner roughly 2" underneath/above previously installed screws

© 2023 Titan Fencing. All Rights Reserved

Step 4: Install gate diagonal brace onto top and bottom of gate rails in opposite corners. ***Note: bottom corner of gate cross brace should be mounted closest to bottom hinge for maximum support and gate rigidity + diagonal brace and hinges installed on backside of gate***

Top view of Gate connection

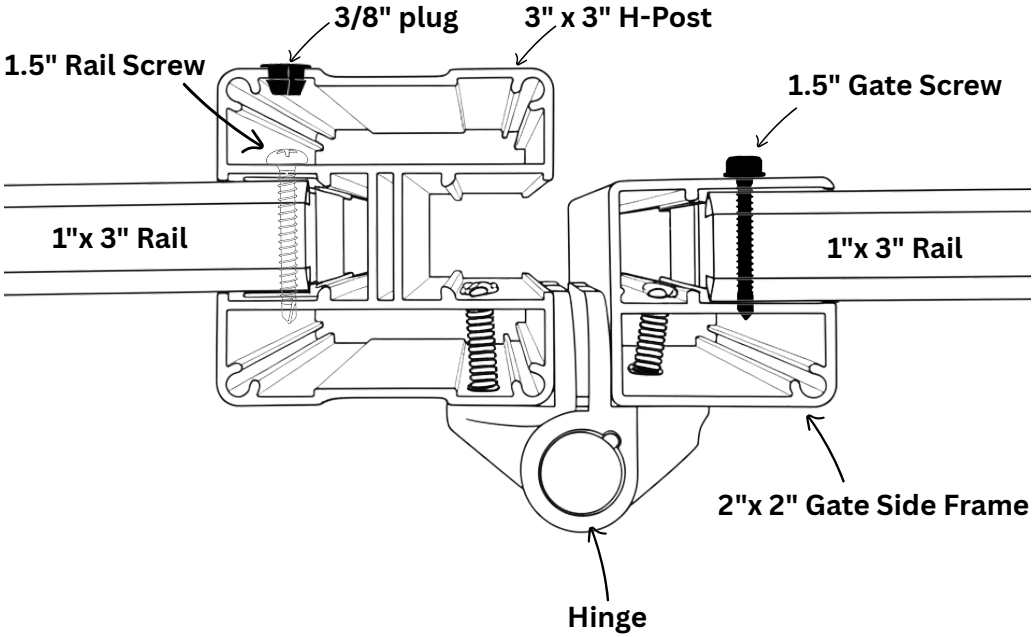

Step 5: Fasten Hinges to back side of the gate (top and bottom) hang gate 1.5" above grade, attach latch to gate post and gate. install gate side frame caps

Step 6: measure and cut rail for overhead brace (note: if both gate posts are plumb, top measurement should be the same as bottom measurement. level and install overhead brace with two 1.5" screws on each side (drill 3/8" hole +install plugs)

© 2023 Titan Fencing. All Rights Reserved

Hybrid Baseplate Mounting

(Solid Surface Mounting)

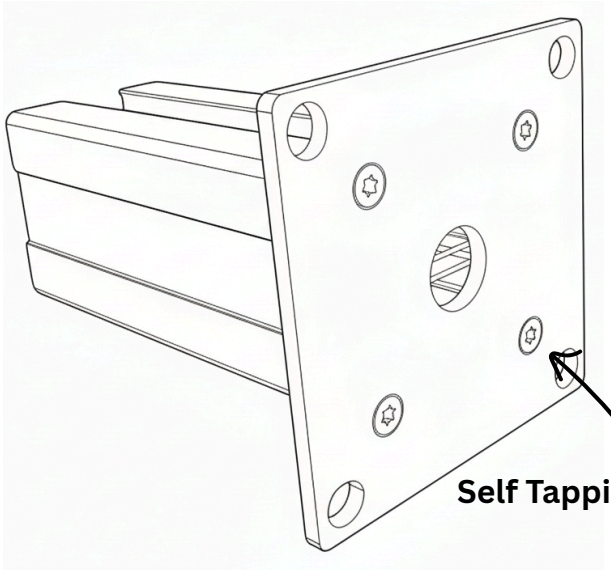

Step 1: install four self tapping mounting screws into corners of post

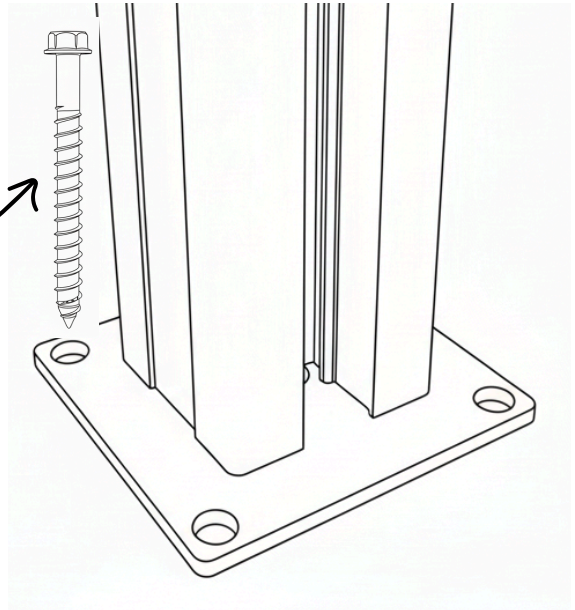

Step 2: Drill and and install four anchor bolts into baseplate

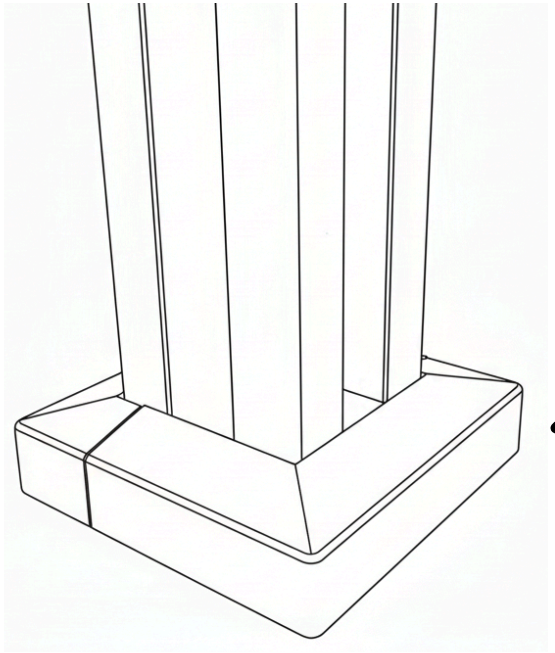

Step 3: Install face plate cover

© 2023 Titan Fencing. All Rights Reserved