Platinum PVC System Installation

Step 1: - String line and spray paint holes **98.75" on center** Spacing, Dig Holes

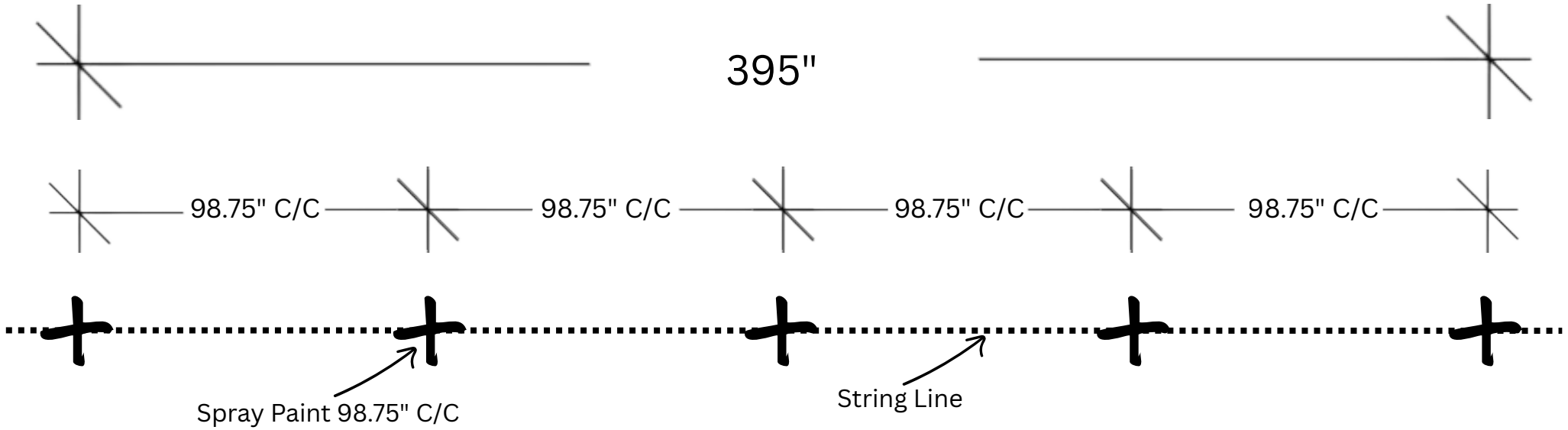

Step 2: Set first and last post of line, attach string line to side of first and last post, tighten string -start setting first full length panel using a 2x4 cut at 96.75" as measuring stick setting posts **96.75" from inside to inside of posts**, plumb posts to string line without moving string line (1/8" Gap)

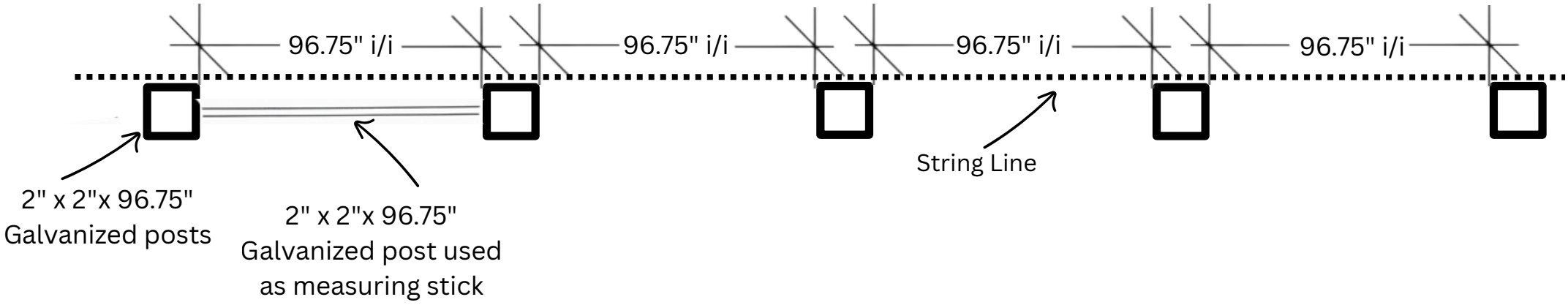

© 2023 Titan Fencing. All Rights Reserved

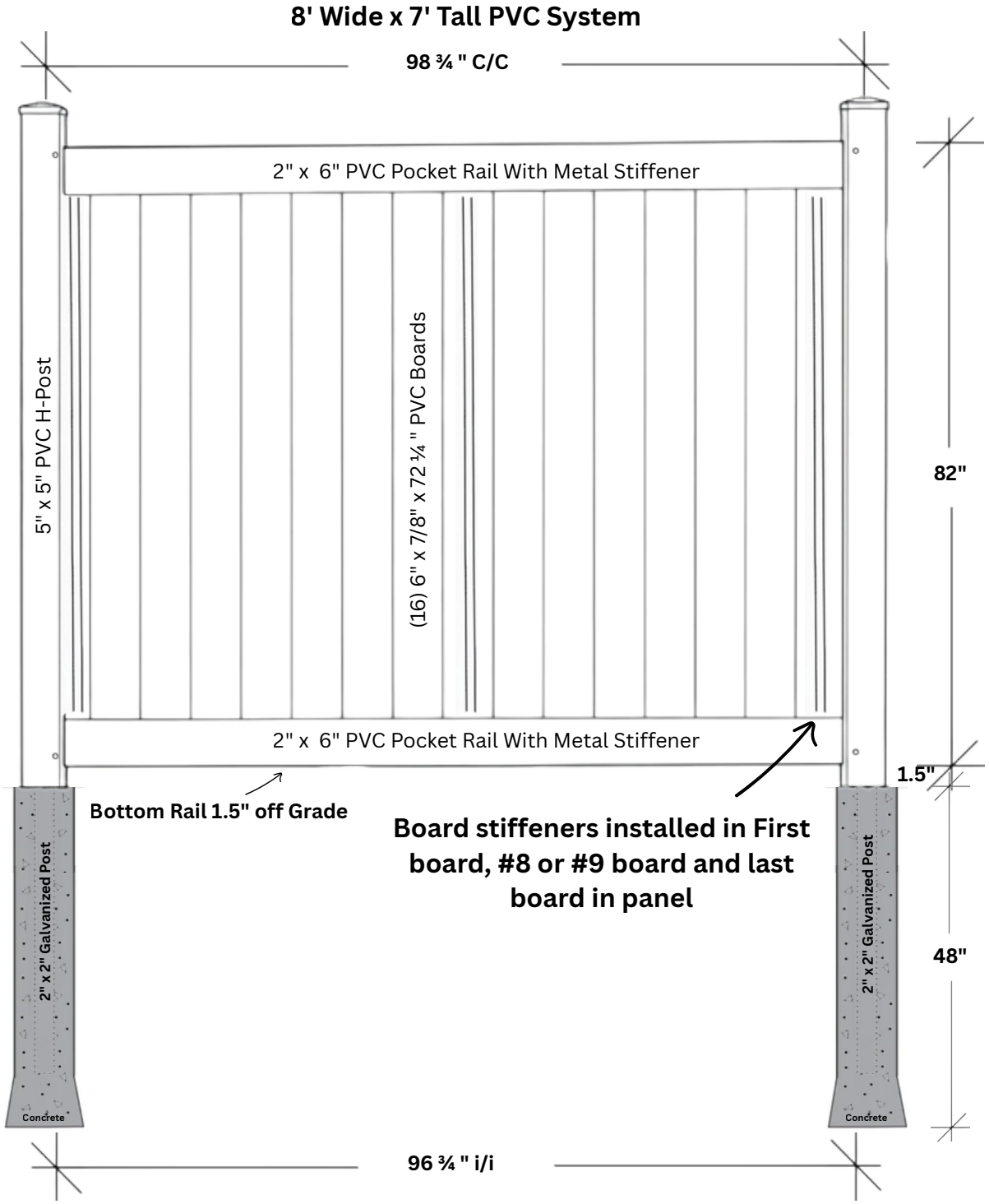

Step 3: once concrete is set, slide H-Posts onto 2" x 2" galvanized post and secure with two 3/4" screw into Galvanized post spaced 1'-2' Apart

Step 4: install bottom rails into H- Posts 1.5" above grade. (choose level + stepped or sloped rails). Drill 5/8" hole with spade bit through first layer of H-Post, inline with rail stiffener. Install 2.5" screw into ⅝" hole and through rail +stiffener, securing rail. Install 5/8" hole plug.

Step 5: Install 16 tongue and groove boards onto bottom rail. Board stiffeners come pre installed in x3 of the boards. install these board stiffeners in boards #1, #8 or 9 and # 16
Note, smaller fence panels require board stiffeners in first and last board only

© 2023 Titan Fencing. All Rights Reserved

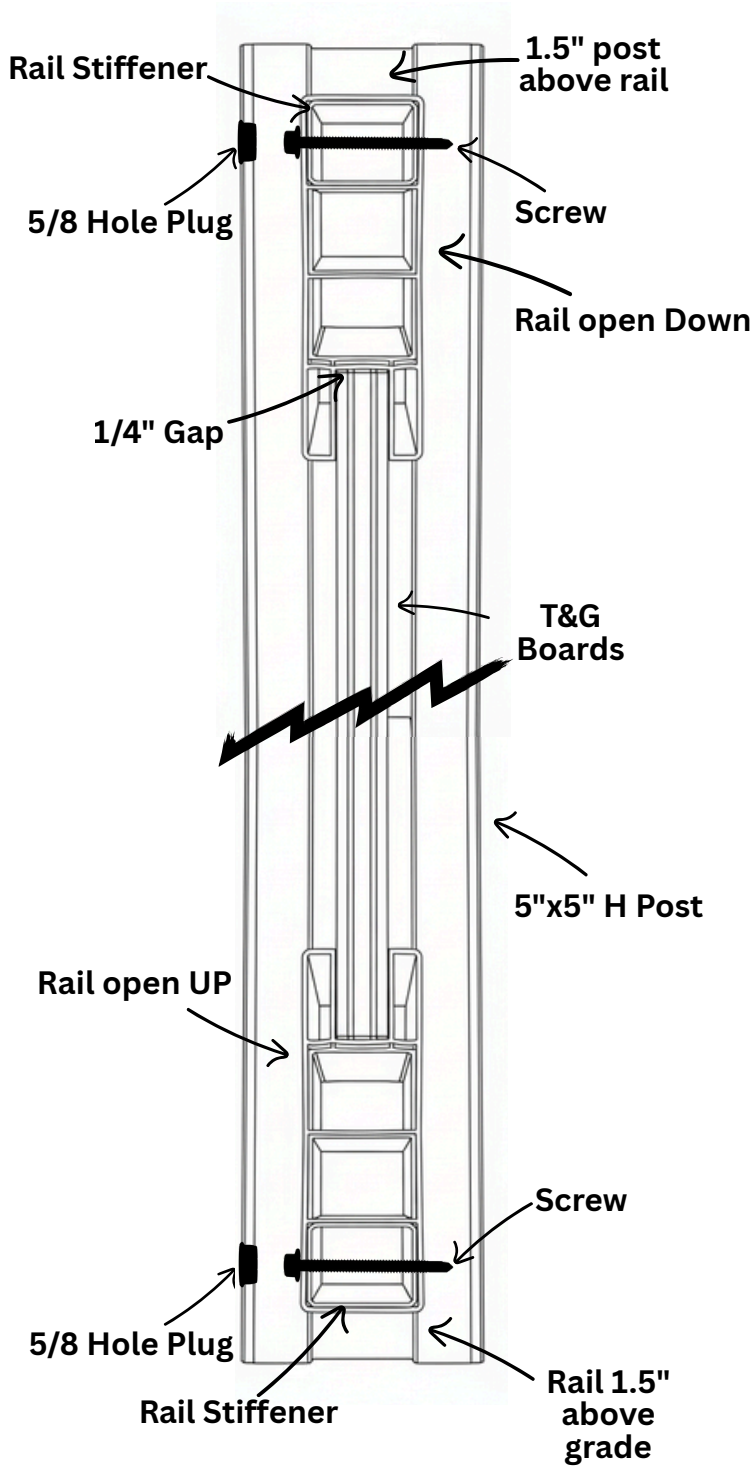

Step 6: install top rails into H-Posts leaving 1/4" between top of boards and bottom of rail for expansion. Drill 5/8" hole with spade bit through first layer of H-Post, inline with rail stiffener. Install 2.5" screw into 5/8" hole and through rail +stiffener, securing rail. Install 5/8" hole plug.

Step 7: Cut H-Posts to desired height, typically 1.5" from top of highest rail. Install post cap

© 2023 Titan Fencing. All Rights Reserved

“T” Connection to H-Post

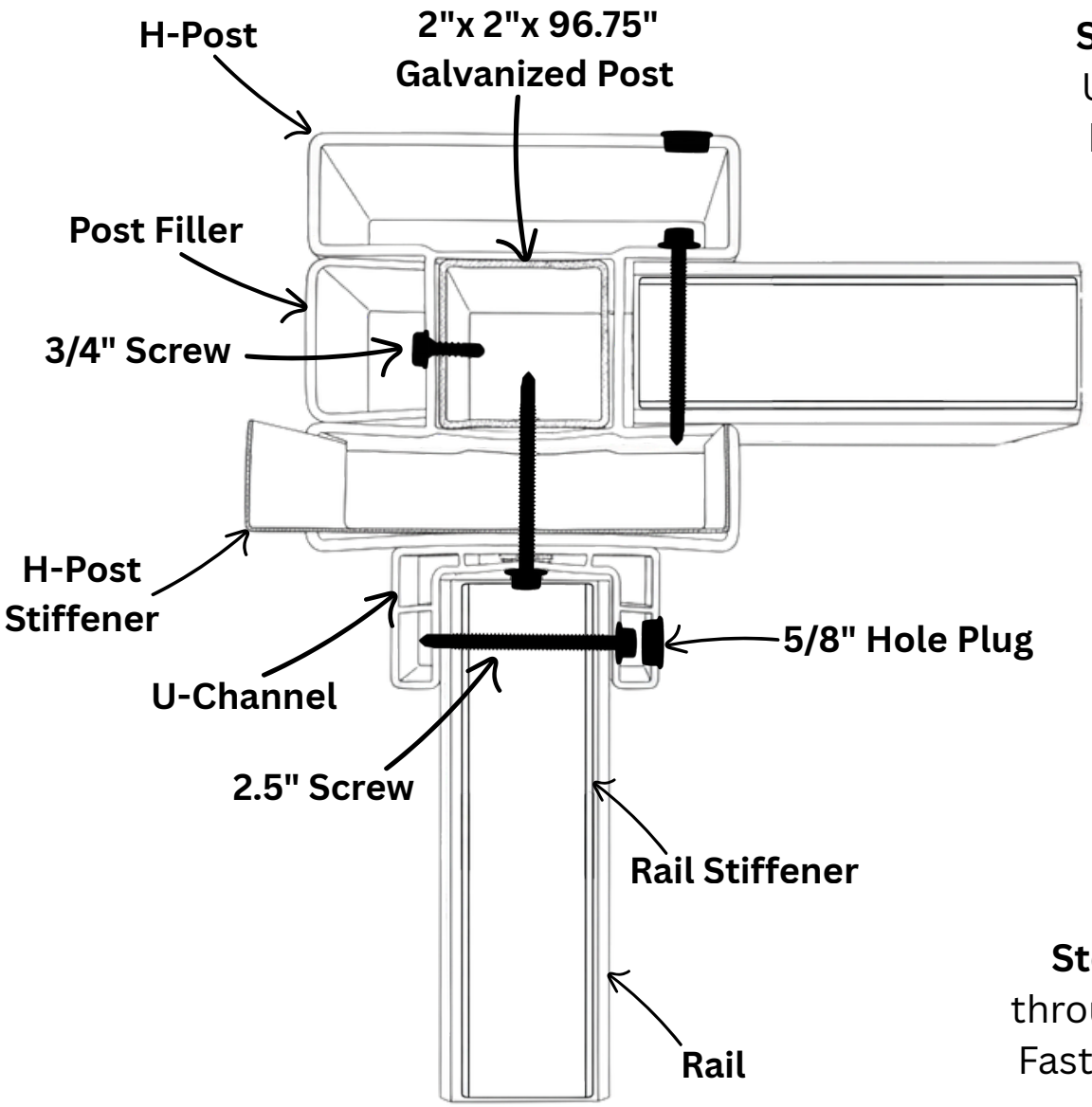

Step 1: Install H-Post stiffener into slot of H-post where U-channel will be mounted, place U-channel at desired height and centered onto H-post. fasten with four 2.5" one at top + bottom of U-channel and two spaced evenly in middle

Step 2: Insert and flush bottom rail into U-channel, drill 5/8" hole through first layer of U-channel inline with rail stiffener. Fasten bottom rail to U-channel with one 2.5" screw. Install ⅝ hole plug

Step 3: Fill panel with boards

Step 4: Insert top rail into U-channel, drill 5/8" hole through first layer of U-channel inline with rail stiffener. Fasten top rail to U-channel with one 2.5" screw. Install ⅝ hole plug

© 2023 Titan Fencing. All Rights Reserved

Platinum PVC Gate Installation

Backside of Gate

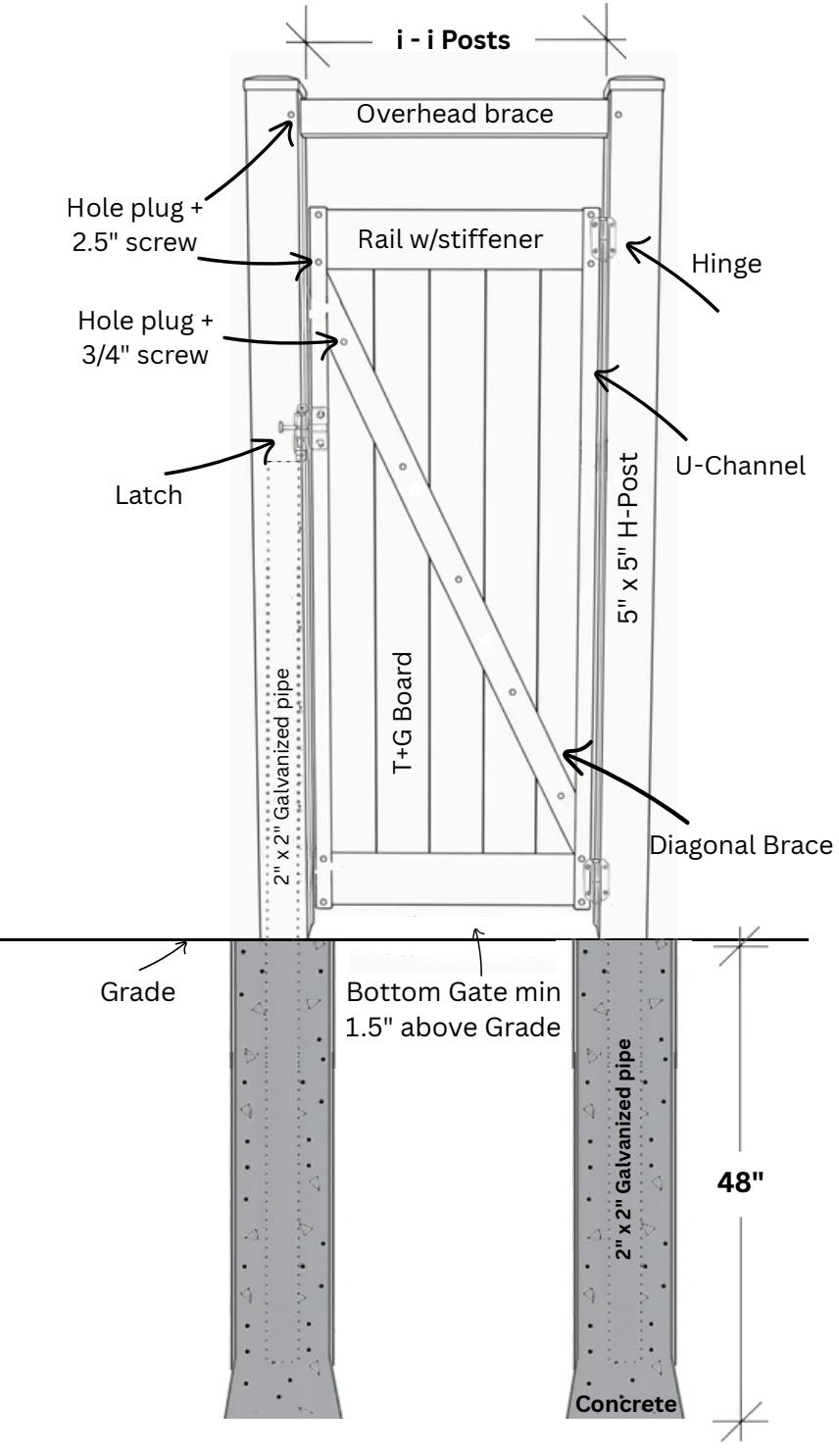

Step 1: Insert H-post stiffener into H-post which will have hinges mounted to. Cut top and bottom gate rails 2**" smaller than the inside to inside** measurement of the gate H-posts

Step 2: Install top and bottom gate rails onto one U-channel. drill 5/8" hole through first layer of U-channel and secure with one 2.5" screw in the outer most corners

Step 3: Fill panel with boards, rip last board as needed. install other U-channel same as the first, 2.5" screws in outer corners only

Step 4: Square gate panel by measuring diagonally from corner to corner, when both diagonal measurements are the same, the gate is square. Lock the gate panel square by installing another 2.5" screw in each corner underneath/above previously installed screws

Step 5: Install diagonal brace - lay brace on angle overhanging U-channels, tray line where brace touches U-channel, cut brace. Install brace in place, drill 5/8" hole in the center of each T+G board (through first layer of diagonal brace) Install 3/4" screw in each hole. Install all hole plugs

Step 6: Measure and cut rail for overhead brace (note: if both gate posts are plumb, top measurement should be the same as bottom measurement. level and install overhead brace, drill 5/8" holes, install one 2.5" screws on each side, install hole plugs

Step 7: Install Hinges on gate. **Note**: bottom hinge should be installed closest to diagonal brace for maximum support and rigidity of gate. install gate hinges onto H-post with H-post stiffener installed. install gate latch

©

© 2023 Titan Fencing. All Rights Reserved